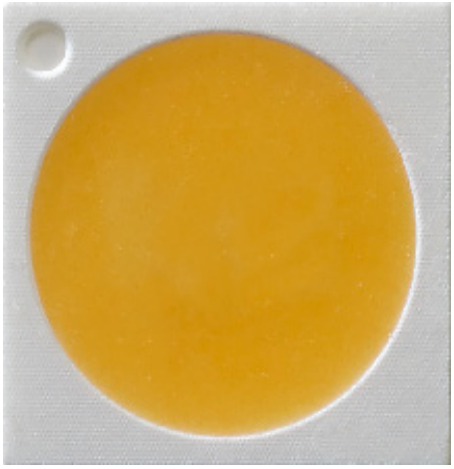

Bridgelux® SMD 3030 Series

Product Data Sheet DS51

BXEM-27x0000 | 30x0000 | 35x0000 | 40x0000 | 50x0000 | 57x0000 | 65x0000

Introduction

SMD 3030

The Bridgelux SMD 3030 offers exceptional performance in a compact LED package. This mid power LED is hot-color targeted which ensures that the LEDs fall within their specified color bin at the typical application conditions of 85˚C. With its broad lumen coverage and wide range of CCT options, the SMD 3030 provides unparalleled design-in flexibility for indoor and outdoor lighting applications. Its high flux capability reduces the number of LEDs and enables industry leading system level lumen per dollar. The SMD 3030 is ideal as a drop in replacement for emitters with an industry standard 3.0mm x 3.0mm footprint.

Features

- Competitive efficacy and lumen per dollar
- Industry-standard 3030 footprint
- Excellent color maintenance
- 9 bin color control enables tight color control
- Superior luminous flux at maximum current for reduced LED count
- Hot-color targeting ensures that color is within the ANSI bin at the typical application conditions of 85˚C
- Enables 3- and 5-step MacAdam ellipse custom binning kits
- RoHS compliant and Lead free
- Multiple CCT and CRI configurations for a wide range of lighting applications

Benefits

- Lower operating and manufacturing cost
- Ease of design and rapid go-to-market
- Uniform consistent white light
- Reliable and constant white point
- Environmentally friendly, complies with standards
- Design flexibility

Contents

Product Feature Map	2
Product Nomenclature	2
Product Test Conditions	2
Product Selection Guide	3
Performance at Commonly Used Drive Currents	5
Electrical Characteristics	9
Absolute Maximum Ratings	10
Product Bin Definitions	11
Performance Curves	14
Typical Radiation Pattern	17
Typical Color Spectrum	18
Mechanical Dimensions	19
Reliability	20
Reflowing Characteristics	21
Packaging	22
Design Resources	24
Precautions	24
Disclaimers	24
About Bridgelux	25

Product Feature Map

Bridgelux SMD LED products offer exceptional performance and color quality all in a highly reliable, cost effective, compact package. Our SMD products come in industry standard package sizes and follow ANSI binning standards.

These LEDs are optimized for cost and performance, helping to ensure highly competitive system lumen per dollar performance while addressing the stringent efficacy and reliability standards required for modern lighting applications.

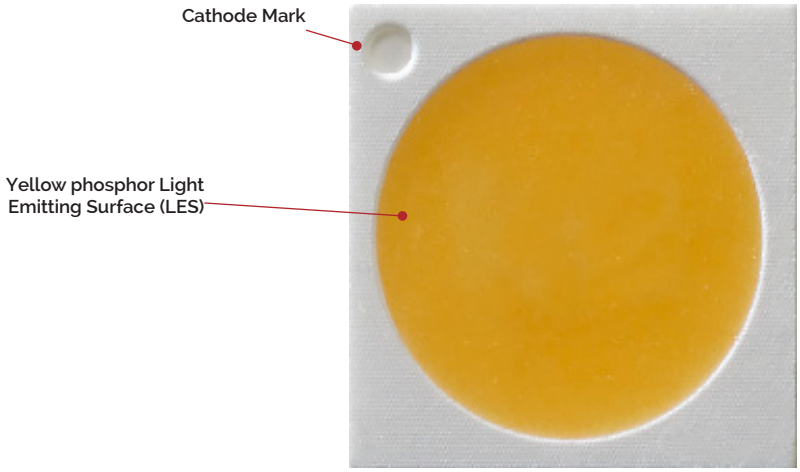

Product Nomenclature

The part number designation for Bridgelux SMD 3030 is explained as follows:

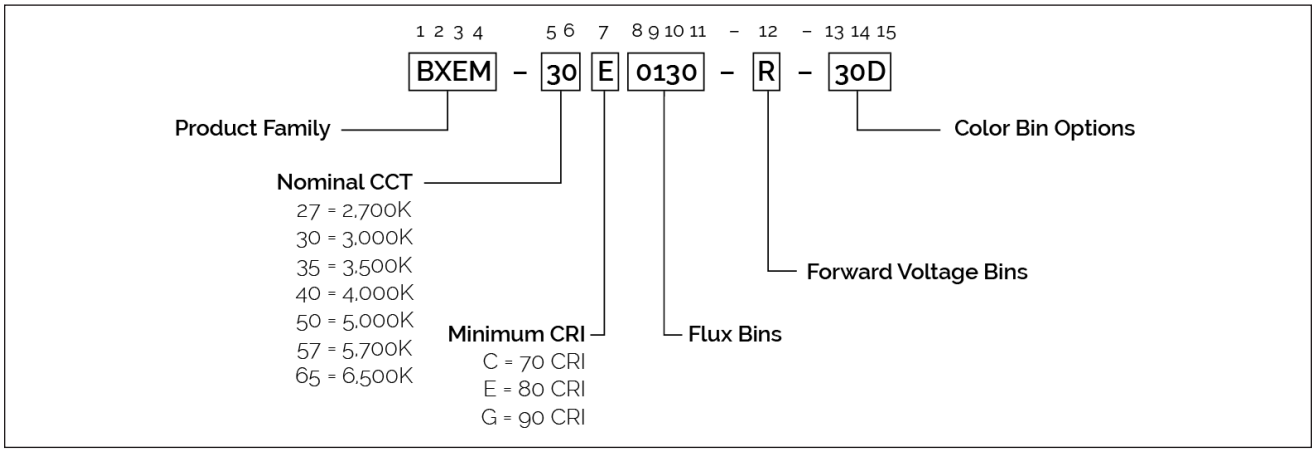

Product Test Conditions

Bridgelux SMD 3030 LEDs are tested and binned with a 10ms pulse of 150mA at T_j (junction temperature)=T_{sp} (solder point temperature) =25˚C. Forward voltage and luminous flux are binned at a T_j=T_{sp}=25˚C, while color is hot targeted at a T_{sp} of 85˚C.

Product Selection Guide

The following product configurations are available:

Table 1: Selection Guide, Pulsed Measurement Data at 150mA (T_j=T_{sp}=25˚C)

Part Number[1,6]	Nominal CCT[2] (K)	CRI[3, 5]	Nominal Drive Current (mA)	Forward Voltage[4, 5] (V)			Minimum Pulsed Flux (lm)[4, 5, 7]	Typical Pulsed Flux (lm)[4, 5]	Typical Power (W)	Typical Efficacy (lm/W)
				Min	Typical	Max				
BXEM-27C0000-0-000	2700	70	150	5.8	6.25	6.6	110	123	0.9	131
BXEM-27E0000-0-000	2700	80	150	5.8	6.25	6.6	100	117	0.9	125
BXEM-27G0000-0-000	2700	90	150	5.8	6.25	6.6	80	98	0.9	105
BXEM-30C0000-0-000	3000	70	150	5.8	6.25	6.6	110	126	0.9	134
BXEM-30E0000-0-000	3000	80	150	5.8	6.25	6.6	110	123	0.9	131
BXEM-30G0000-0-000	3000	90	150	5.8	6.25	6.6	90	103	0.9	110
BXEM-35C0000-0-000	3500	70	150	5.8	6.25	6.6	110	129	0.9	138
BXEM-35E0000-0-000	3500	80	150	5.8	6.25	6.6	110	125	0.9	133
BXEM-35G0000-0-000	3500	90	150	5.8	6.25	6.6	90	105	0.9	112
BXEM-40C0000-0-000	4000	70	150	5.8	6.25	6.6	120	133	0.9	142
BXEM-40E0000-0-000	4000	80	150	5.8	6.25	6.6	110	127	0.9	135
BXEM-40G0000-0-000	4000	90	150	5.8	6.25	6.6	90	108	0.9	115
BXEM-50C0000-0-000	5000	70	150	5.8	6.25	6.6	120	133	0.9	142
BXEM-50E0000-0-000	5000	80	150	5.8	6.25	6.6	110	127	0.9	135
BXEM-50G0000-0-000	5000	90	150	5.8	6.25	6.6	90	108	0.9	115
BXEM-57C0000-0-000	5700	70	150	5.8	6.25	6.6	120	133	0.9	142
BXEM-57E0000-0-000	5700	80	150	5.8	6.25	6.6	110	127	0.9	135
BXEM-57G0000-0-000	5700	90	150	5.8	6.25	6.6	90	108	0.9	115
BXEM-65C0000-0-000	6500	70	150	5.8	6.25	6.6	120	133	0.9	142
BXEM-65E0000-0-000	6500	80	150	5.8	6.25	6.6	110	126	0.9	134
BXEM-65G0000-0-000	6500	90	150	5.8	6.25	6.6	90	108	0.9	115

Notes for Table 1:

1. The last 10 characters (including hyphens '-') refer to nominal flux, nominal forward voltage, and color bins, respectively. "0000-0-000" denotes the full distribution of flux, forward voltage, and 7 SDCM color.

   Example: BXEM-30E0000-0-000 refers to the full distribution of flux, forward voltage, and color within a 3000K 7-step ANSI standard chromaticity region with a minimum of 80CRI.
2. Product CCT is hot targeted at T_{sp} = 85˚C. Nominal CCT as defined by ANSI C78.377-2011.
3. Listed CRIs are minimum values and include test tolerance.
4. Products tested under pulsed condition (10ms pulse width) at nominal drive current where T_j=T_{sp}=25˚C.
5. Bridgelux maintains a ±7.5% tolerance on luminous flux measurements, ±0.1V tolerance on forward voltage measurements, and ±2 tolerance on CRI measurements for the SMD 3030.
6. Refer to Table 6 and Table 7 for Bridgelux SMD 3030 Luminous Flux Binning and Forward Voltage Binning information.
7. Minimum flux values at elevated temperatures are provided for reference only and are not guaranteed by 100% production testing.

Product Selection Guide

Table 2: Selection Guide, Stabilized DC Performance (T_{sp} = 85°C)[6,7]

Part Number[1,5]	Nominal CCT[2] (K)	CRI[3,4]	Nominal Drive Current (mA)	Forward Voltage[4] (V)			Minimum DC Flux (lm)[4,8]	Typical DC Flux (lm)[4]	Typical Power (W)	Typical Efficacy (lm/W)
				Min	Typical	Max				
BXEM-27C0000-0-000	2700	70	150	5.6	6.0	6.4	91	102	0.9	113
BXEM-27E0000-0-000	2700	80	150	5.6	6.0	6.4	85	99	0.9	111
BXEM-27G0000-0-000	2700	90	150	5.6	6.0	6.4	68	83	0.9	93
BXEM-30C0000-0-000	3000	70	150	5.6	6.0	6.4	91	105	0.9	116
BXEM-30E0000-0-000	3000	80	150	5.6	6.0	6.4	94	105	0.9	116
BXEM-30G0000-0-000	3000	90	150	5.6	6.0	6.4	77	88	0.9	97
BXEM-35C0000-0-000	3500	70	150	5.6	6.0	6.4	92	108	0.9	120
BXEM-35E0000-0-000	3500	80	150	5.6	6.0	6.4	92	105	0.9	117
BXEM-35G0000-0-000	3500	90	150	5.6	6.0	6.4	77	90	0.9	100
BXEM-40C0000-0-000	4000	70	150	5.6	6.0	6.4	101	112	0.9	124
BXEM-40E0000-0-000	4000	80	150	5.6	6.0	6.4	92	107	0.9	119
BXEM-40G0000-0-000	4000	90	150	5.6	6.0	6.4	77	93	0.9	103
BXEM-50C0000-0-000	5000	70	150	5.6	6.0	6.4	102	113	0.9	126
BXEM-50E0000-0-000	5000	80	150	5.6	6.0	6.4	92	107	0.9	119
BXEM-50G0000-0-000	5000	90	150	5.6	6.0	6.4	77	92	0.9	102
BXEM-57C0000-0-000	5700	70	150	5.6	6.0	6.4	102	113	0.9	126
BXEM-57E0000-0-000	5700	80	150	5.6	6.0	6.4	92	107	0.9	119
BXEM-57G0000-0-000	5700	90	150	5.6	6.0	6.4	77	92	0.9	102
BXEM-65C0000-0-000	6500	70	150	5.6	6.0	6.4	102	113	0.9	126
BXEM-65E0000-0-000	6500	80	150	5.6	6.0	6.4	91	105	0.9	116
BXEM-65G0000-0-000	6500	90	150	5.6	6.0	6.4	77	92	0.9	102

Notes for Table 2:

1. The last 10 characters (including hyphens '-') refer to nominal flux, nominal forward voltage, and color bins, respectively. "0000-0-000" denotes the full distribution of flux, forward voltage, and 7 SDCM color.

   Example: BXEM-30E0000-0-000 refers to the full distribution of flux, forward voltage, and color within a 3000K 7-step ANSI standard chromaticity region with a minimum of 80CRI.
2. Product CCT is hot targeted at T_{sp} = 85°C. Nominal CCT as defined by ANSI C78.377-2011.
3. Listed CRIs are minimum values and include test tolerance.
4. Bridgelux maintains a ±7.5% tolerance on luminous flux measurements, ±0.1V tolerance on forward voltage measurements, and ±2 tolerance on CRI measurements for the SMD 3030.
5. Refer to Table 6 and Table 7 for Bridgelux SMD 3030 Luminous Flux Binning and Forward Voltage Binning information.
6. Typical stabilized DC performance values are provided as reference only and are not a guarantee of performance.
7. Typical performance is estimated based on operation under DC (direct current) with LED emitter mounted onto a heat sink with thermal interface material and the solder point temperature maintained at 85°C. Based on Bridgelux test setup, values may vary depending on the thermal design of the luminaire and/or the exposed environment to which the product is subjected.
8. Minimum flux values at elevated temperatures are provided for reference only and are not guaranteed by 100% production testing.

Performance at Commonly Used Drive Currents

SMD 3030 LEDs are tested to the specifications shown using the nominal drive currents in Table 1. SMD 3030 may also be driven at other drive currents dependent on specific application design requirements. The performance at any drive current can be derived from the current vs. voltage characteristics shown in Figure 2 and the relative luminous flux vs. current characteristics shown in Figure 3. The performance at commonly used drive currents is summarized in Table 3.

Table 3: Performance at Commonly Used Drive Currents

Part Number	CRI	Drive Current[1] (mA)	Typical V_f T_{sp} = 25°C (V)	Typical Power T_{sp} = 25°C (W)	Typical Pulsed Flux[2] T_{sp} = 25°C (lm)	Typical DC Flux[3] T_{sp} = 85°C (lm)	Typical Efficacy T_{sp} = 25°C (lm/W)
BXEM-27C0000-0-000	70	30	5.5	0.2	28	24	171
		60	5.7	0.3	55	47	159
		100	6.0	0.6	87	74	145
		150	**6.25**	**0.9**	**123**	**102**	**131**
		200	6.5	1.3	156	124	119
		240	6.7	1.6	179	138	111
BXEM-27E0000-0-000	80	30	5.5	0.2	27	24	163
		60	5.7	0.3	52	46	152
		100	6.0	0.6	82	72	138
		150	**6.25**	**0.9**	**117**	**99**	**125**
		200	6.5	1.3	148	121	114
		240	6.7	1.6	170	134	106
BXEM-27G0000-0-000	90	30	5.5	0.2	22	20	136
		60	5.7	0.3	43	39	127
		100	6.0	0.6	69	60	116
		150	**6.25**	**0.9**	**98**	**83**	**105**
		200	6.5	1.3	124	101	95
		240	6.7	1.6	142	112	88
BXEM-30C0000-0-000	70	30	5.5	0.2	29	25	175
		60	5.7	0.3	56	49	163
		100	6.0	0.6	89	76	149
		150	**6.25**	**0.9**	**126**	**105**	**134**
		200	6.5	1.3	159	127	122
		240	6.7	1.6	183	141	114
BXEM-30E0000-0-000	80	30	5.5	0.2	28	25	171
		60	5.7	0.3	55	49	159
		100	6.0	0.6	87	76	145
		150	**6.25**	**0.9**	**123**	**105**	**131**
		200	6.5	1.3	156	127	119
		240	6.7	1.6	179	141	111
BXEM-30G0000-0-000	90	30	5.5	0.2	23	21	143
		60	5.7	0.3	46	41	134
		100	6.0	0.6	73	64	122
		150	**6.25**	**0.9**	**103**	**88**	**110**
		200	6.5	1.3	130	107	100
		240	6.7	1.6	150	118	93

Notes for Table 3:

1. Alternate drive currents in Table 3 are provided for reference only and are not a guarantee of performance.
2. Bridgelux maintains a ± 7.5% tolerance on flux measurements.
3. Typical stabilized DC performance values are provided as reference only and are not a guarantee of performance.

Performance at Commonly Used Drive Currents

Table 3: Performance at Commonly Used Drive Currents (Continued)

Part Number	CRI	Drive Current[1] (mA)	Typical V_f T_{sp} = 25°C (V)	Typical Power T_{sp} = 25°C (W)	Typical Flux[2] T_{sp} = 25°C (lm)	Typical DC Flux[3] T_{sp} = 85°C (lm)	Typical Efficacy (lm/W)
BXEM-35C0000-0-000	70	30	5.5	0.2	29	26	179
		60	5.7	0.3	57	50	167
		100	6.0	0.6	91	79	153
		150	**6.25**	**0.9**	**129**	**108**	**138**
		200	6.5	1.3	163	132	125
		240	6.7	1.6	187	146	116
BXEM-35E0000-0-000	80	30	5.5	0.2	28	25	174
		60	5.7	0.3	55	49	162
		100	6.0	0.6	88	76	148
		150	**6.25**	**0.9**	**125**	**105**	**133**
		200	6.5	1.3	158	128	121
		240	6.7	1.6	182	142	113
BXEM-35G0000-0-000	90	30	5.5	0.2	24	21	146
		60	5.7	0.3	47	42	136
		100	6.0	0.6	74	66	124
		150	**6.25**	**0.9**	**105**	**90**	**112**
		200	6.5	1.3	133	110	102
		240	6.7	1.6	153	122	95
BXEM-40C0000-0-000	70	30	5.5	0.2	30	27	185
		60	5.7	0.3	59	52	172
		100	6.0	0.6	94	81	157
		150	**6.25**	**0.9**	**133**	**112**	**142**
		200	6.5	1.3	168	136	129
		240	6.7	1.6	193	151	120
BXEM-40E0000-0-000	80	30	5.5	0.2	29	25	176
		60	5.7	0.3	56	50	165
		100	6.0	0.6	90	77	150
		150	**6.25**	**0.9**	**127**	**107**	**136**
		200	6.5	1.3	161	130	123
		240	6.7	1.6	185	144	115
BXEM-40G0000-0-000	90	30	5.5	0.2	25	22	150
		60	5.7	0.3	48	43	140
		100	6.0	0.6	76	67	128
		150	**6.25**	**0.9**	**108**	**93**	**115**
		200	6.5	1.3	137	113	105
		240	6.7	1.6	157	125	97

Notes for Table 3:

1. Alternate drive currents in Table 3 are provided for reference only and are not a guarantee of performance.
2. Bridgelux maintains a ± 7.5% tolerance on flux measurements.
3. Typical stabilized DC performance values are provided as reference only and are not a guarantee of performance.

Performance at Commonly Used Drive Currents

Table 3: Performance at Commonly Used Drive Currents (Continued)

Part Number	CRI	Drive Current[1] (mA)	Typical V_f T_{sp} = 25°C (V)	Typical Power T_{sp} = 25°C (W)	Typical Flux[2] T_{sp} = 25°C (lm)	Typical DC Flux[3] T_{sp} = 85°C (lm)	Typical Efficacy (lm/W)
BXEM-50C0000-0-000	70	30	5.5	0.2	30	27	185
		60	5.7	0.3	59	53	172
		100	6.0	0.6	94	82	157
		150	**6.25**	**0.9**	**133**	**113**	**142**
		200	6.5	1.3	168	138	129
		240	6.7	1.6	193	152	120
BXEM-50E0000-0-000	80	30	5.5	0.2	29	25	176
		60	5.7	0.3	56	50	165
		100	6.0	0.6	90	77	150
		150	**6.25**	**0.9**	**127**	**107**	**136**
		200	6.5	1.3	161	130	123
		240	6.7	1.6	185	144	115
BXEM-50G0000-0-000	90	30	5.5	0.2	25	22	150
		60	5.7	0.3	48	43	140
		100	6.0	0.6	76	67	128
		150	**6.25**	**0.9**	**108**	**92**	**115**
		200	6.5	1.3	137	112	105
		240	6.7	1.6	157	124	97
BXEM-57C0000-0-000	70	30	5.5	0.2	30	27	185
		60	5.7	0.3	59	53	172
		100	6.0	0.6	94	82	157
		150	**6.25**	**0.9**	**133**	**113**	**142**
		200	6.5	1.3	168	138	129
		240	6.7	1.6	193	152	120
BXEM-57E0000-0-000	80	30	5.5	0.2	29	25	176
		60	5.7	0.3	56	50	165
		100	6.0	0.6	90	77	150
		150	**6.25**	**0.9**	**127**	**107**	**136**
		200	6.5	1.3	161	130	123
		240	6.7	1.6	185	144	115
BXEM-57G0000-0-000	90	30	5.5	0.2	25	22	150
		60	5.7	0.3	48	43	140
		100	6.0	0.6	76	67	128
		150	**6.25**	**0.9**	**108**	**92**	**115**
		200	6.5	1.3	137	112	105
		240	6.7	1.6	157	124	97

Notes for Table 3:

1. Alternate drive currents in Table 3 are provided for reference only and are not a guarantee of performance.
2. Bridgelux maintains a ± 7.5% tolerance on flux measurements.
3. Typical stabilized DC performance values are provided as reference only and are not a guarantee of performance.

Performance at Commonly Used Drive Currents

Table 3: Performance at Commonly Used Drive Currents (Continued)

Part Number	CRI	Drive Current[1] (mA)	Typical V_f T_{sp} = 25°C (V)	Typical Power T_{sp} = 25°C (W)	Typical Flux[2] T_{sp} = 25°C (lm)	Typical DC Flux[3] T_{sp} = 85°C (lm)	Typical Efficacy (lm/W)
BXEM-65C0000-0-000	70	30	5.5	0.2	30	27	185
		60	5.7	0.3	59	53	172
		100	6.0	0.6	94	82	157
		150	**6.25**	**0.9**	**133**	**113**	**142**
		200	6.5	1.3	168	138	129
		240	6.7	1.6	193	152	120
BXEM-65E0000-0-000	80	30	5.5	0.2	29	25	175
		60	5.7	0.3	56	49	163
		100	6.0	0.6	89	76	149
		150	**6.25**	**0.9**	**126**	**105**	**134**
		200	6.5	1.3	159	127	122
		240	6.7	1.6	183	141	114
BXEM-65G0000-0-000	90	30	5.5	0.2	25	22	150
		60	5.7	0.3	48	43	140
		100	6.0	0.6	76	67	128
		150	**6.25**	**0.9**	**108**	**92**	**115**
		200	6.5	1.3	137	112	105
		240	6.7	1.6	157	124	97

Notes for Table 3:

1. Alternate drive currents in Table 3 are provided for reference only and are not a guarantee of performance.
2. Bridgelux maintains a ± 7.5% tolerance on flux measurements.
3. Typical stabilized DC performance values are provided as reference only and are not a guarantee of performance.

Electrical Characteristics

Table 4: Electrical Characteristics

Part Number [1]	Drive Current (mA)	Forward Voltage (V) [2,3]			Typical Temperature Coefficient of Forward Voltage $\Delta V_f/\Delta T$ (mV/°C)	Typical Thermal Resistance Junction to Solder Point[4,5] $R_{j\text{-}sp}$ (C/W)
		Minimum	Typical	Maximum		
BXEM-xxx0000-0-000	150	5.8	6.25	6.6	-2.0 to -4.0	12

Notes for Table 4:

1. The 10 characters (including hyphens '-') refer to nominal flux, nominal forward voltage, and color bins, respectively. "0000-0-000" denotes the full distribution of flux, forward voltage, and 7 SDCM color.

   Example: BXEM-30E0000-0-000 refers to the full distribution of flux, forward voltage, and color within a 3000K 7-step ANSI standard chromaticity region with a minimum of 80CRI.
2. Bridgelux maintains a tolerance of ± 0.1V on forward voltage measurements. Voltage minimum and maximum values at the nominal drive current are guaranteed by 100% test.
3. Products tested under pulsed condition (10ms pulse width) at nominal drive current where T_{sp} = 25°C.
4. Thermal Resistance values based on 3000K 80CRI product.
5. Thermal resistance value was calculated using total electrical input power; optical power was not subtracted from input power.

Absolute Maximum Ratings

Table 5: Maximum Ratings

Parameter	Maximum Rating
LED Junction Temperature (T_j)	125˚C
Storage Temperature	-40˚C to +100˚C
Operating Solder Point Temperature (T_{Sp})	-40˚C to +100˚C
Soldering Temperature	260˚C or lower for a maximum of 10 seconds
Maximum Drive Current	240mA
Maximum Peak Pulsed Forward Current[1]	480mA
Maximum Reverse Voltage[2]	-10V
Moisture Sensitivity Rating	MSL 3
Electrostatic Discharge	2kV HBM. JEDEC-JS-001-HBM and JEDEC-JS-001-2012

Notes for Table 5:

1. Bridgelux recommends a maximum duty cycle of 10% and pulse width of 10 ms when operating LED SMD at maximum peak pulsed current specified. Maximum peak pulsed currents indicate values where LED SMD can be driven without catastrophic failures.
2. Light emitting diodes are not designed to be driven in reverse voltage and will not produce light under this condition. Maximum rating provided for reference only.

Product Bin Definitions

Table 6 lists the standard photometric luminous flux bins for Bridgelux SMD 3030 LEDs. Although several bins are outlined, product availability in a particular bin varies by production run and by product performance. Not all bins are available in all CCTs.

Table 6: Luminous Flux Bin Definitions at 150mA, T_{sp}=25˚C

Bin Code	Minimum	Maximum	Unit	Condition
0060	60	70	lm	I_F=150mA
0070	70	80		
0080	80	90		
0090	90	100		
0100	100	110		
0110	110	120		
0120	120	130		
0130	130	140		
0140	140	150		
0150	150	160		

Note for Table 6:

1. Bridgelux maintains a tolerance of ± 7.5% on luminous flux measurements.

Table 7: Forward Voltage Bin Definition

Bin Code	Minimum	Maximum	Unit	Condition
P	5.8	6.0	V	I_F=150mA
Q	6.0	6.2		
R	6.2	6.4		
S	6.4	6.6		

Note for Table 7:

1. Bridgelux maintains a tolerance of ± 0.1V on forward voltage measurements.

Product Bin Definitions

Table 8: 3- and 5-step MacAdam Ellipse Color Bin Definitions

CCT	Color Space	Center Point		Major Axis	Minor Axis	Ellipse Rotation Angle	Color Bin
		X	Y				
2700K	3 SDCM	0.4578	0.4101	0.00810	0.00420	53.70	270
	5 SDCM	0.4578	0.4101	0.01350	0.00700	53.70	270/27A/27B/27C/27D
3000K	3 SDCM	0.4338	0.4030	0.00834	0.00408	53.22	300
	5 SDCM	0.4338	0.4030	0.01390	0.00680	53.22	300/30A/30B/30C/30D
3500K	3 SDCM	0.4073	0.3917	0.00927	0.00414	54.00	350
	5 SDCM	0.4073	0.3917	0.01545	0.00690	54.00	350/35A/35B/35C/35D
4000K	3 SDCM	0.3818	0.3797	0.00939	0.00402	53.72	400
	5 SDCM	0.3818	0.3797	0.01565	0.00670	53.72	400/40A/40B/40C/40D
5000K	3 SDCM	0.3447	0.3553	0.00822	0.00354	59.62	500
	5 SDCM	0.3447	0.3553	0.01370	0.00590	59.62	500/50A/50B/50C/50D
5700K	3 SDCM	0.3287	0.3417	0.00746	0.00320	59.09	570
	5 SDCM	0.3287	0.3417	0.01243	0.00533	59.09	570/57A/57B/57C/57D

Notes for Table 8:

1. Color binning at T_{sp}=85˚C
2. Bridgelux maintains a tolerance of ± 0.007 on x and y color coordinates in the CIE 1931 color space.

Product Bin Definitions

Figure 1: C.I.E. 1931 Chromaticity Diagram (9 Color Bin Structure, hot-color targeted at T_{sp}=85˚C)

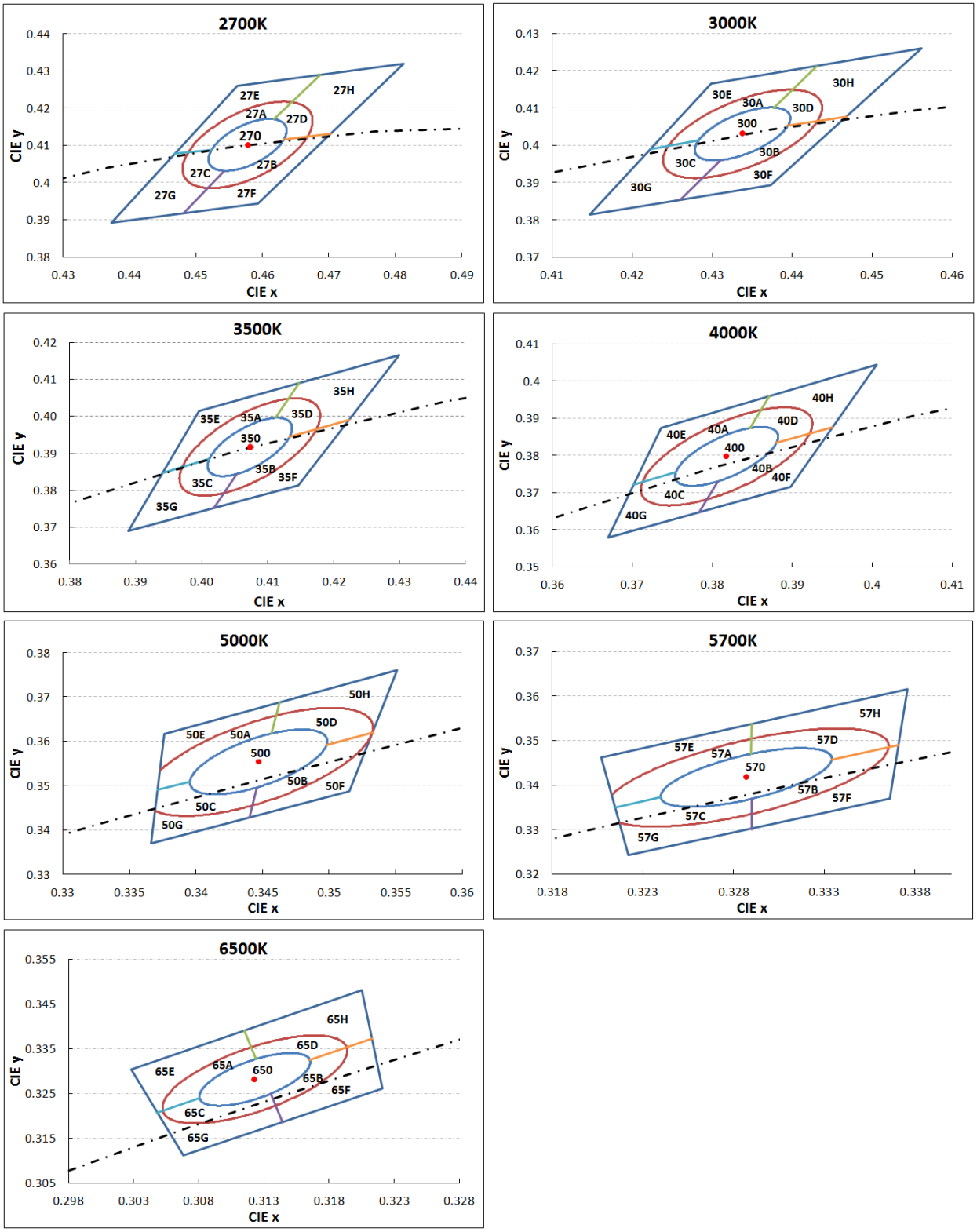

Performance Curves

Figure 2: **Drive Current vs. Voltage (T_{sp}=25˚C)**

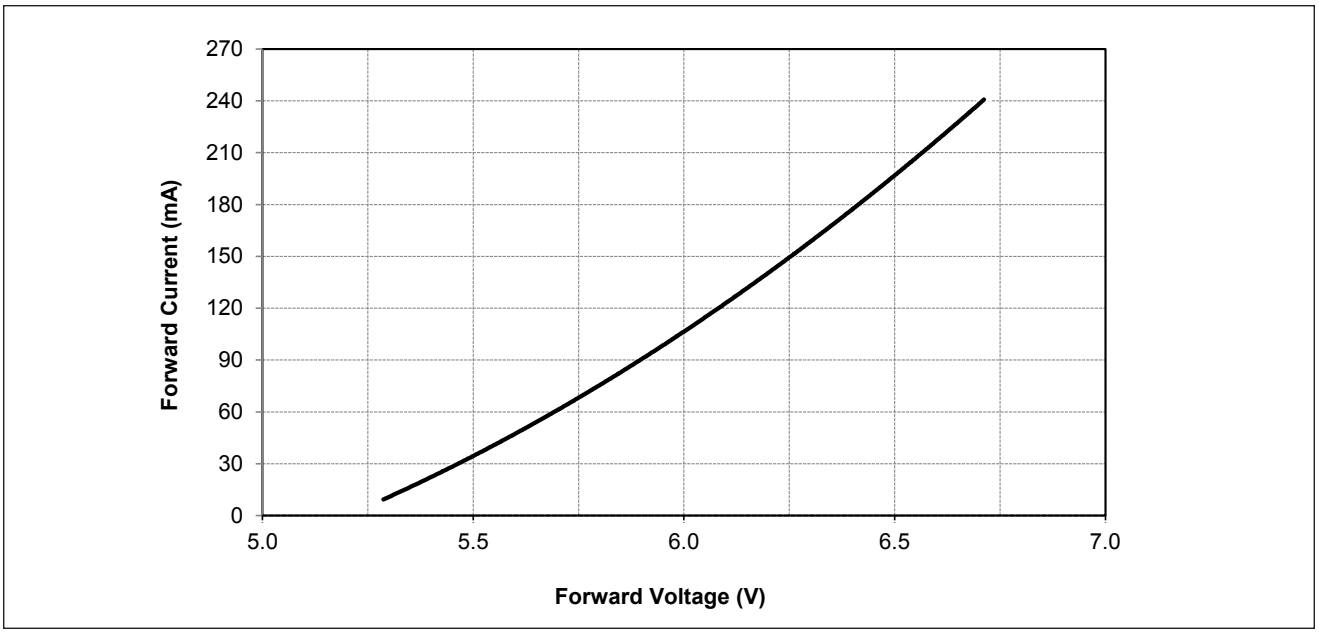

Figure 3: **Typical Relative Luminous Flux vs. Drive Current (T_{sp}=25˚C)**

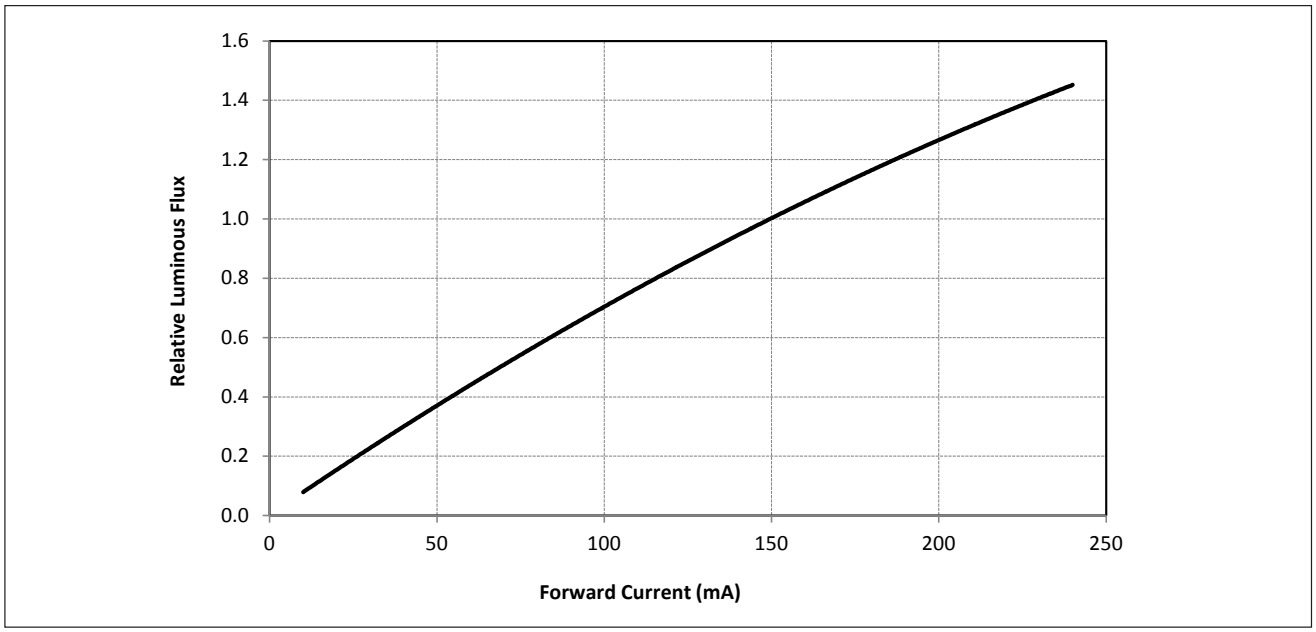

Note for Figure 3:

1. Bridgelux does not recommend driving high power LEDs at low currents. Doing so may produce unpredictable results. Pulse width modulation (PWM) is recommended for dimming effects.

Performance Curves

Figure 4: **Typical Relative DC Flux vs. Solder Point Temperature**

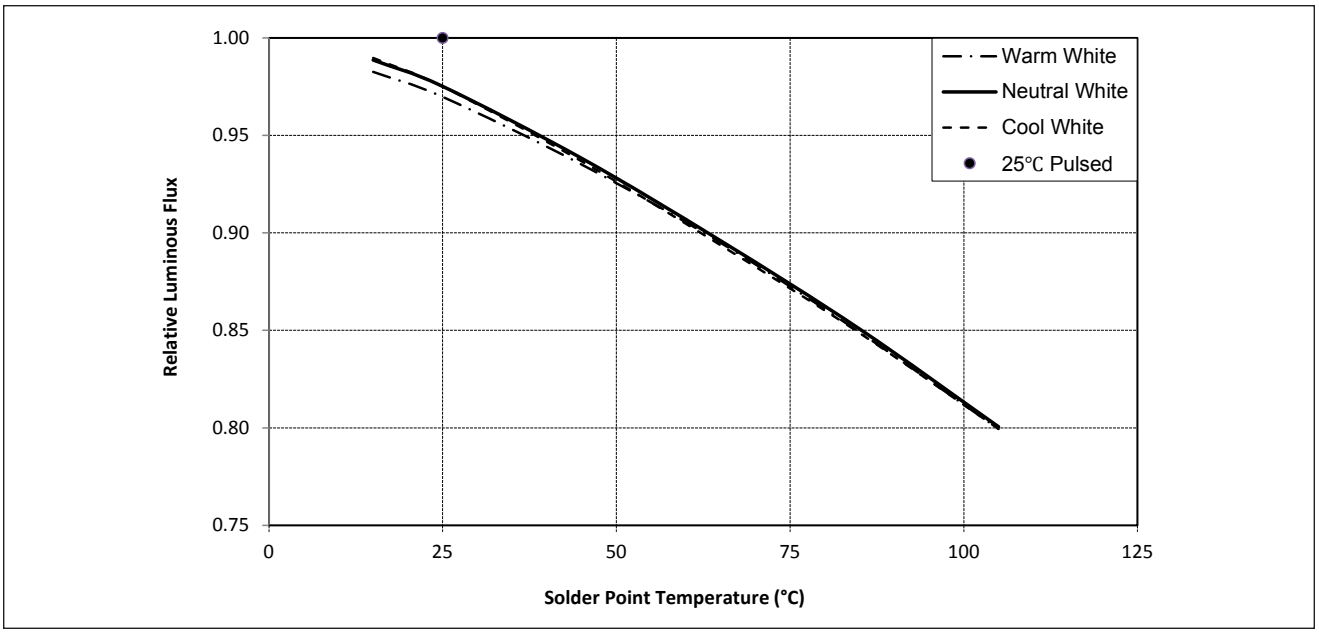

Figure 5: **Typical DC ccy Shift vs. Solder Point Temperature**

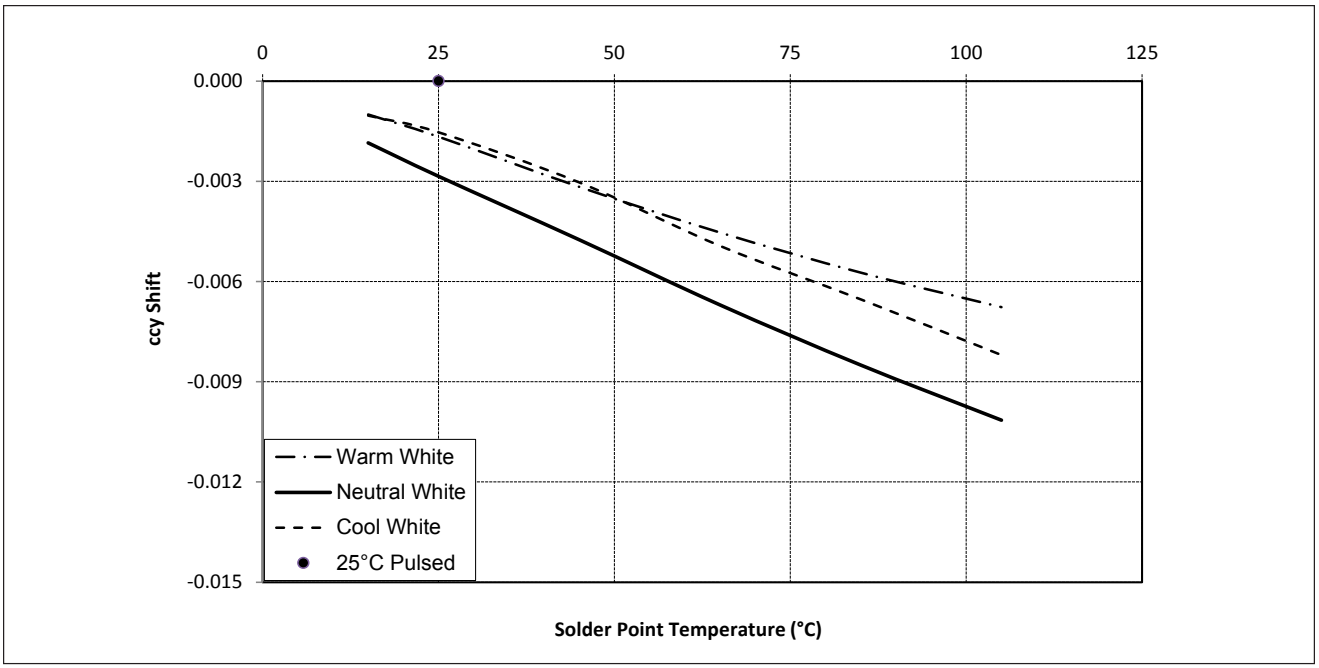

Notes for Figures 4 & 5:

1. Characteristics shown for warm white based on 3000K and 80 CRI.
2. Characteristics shown for neutral white based on 4000K and 80 CRI.
3. Characteristics shown for cool white based on 5000K and 70 CRI.
4. For other color SKUs, the shift in color will vary. Please contact your Bridgelux Sales Representative for more information.

Performance Curves

Figure 6: Typical DC ccx Shift vs. Solder Point Temperature

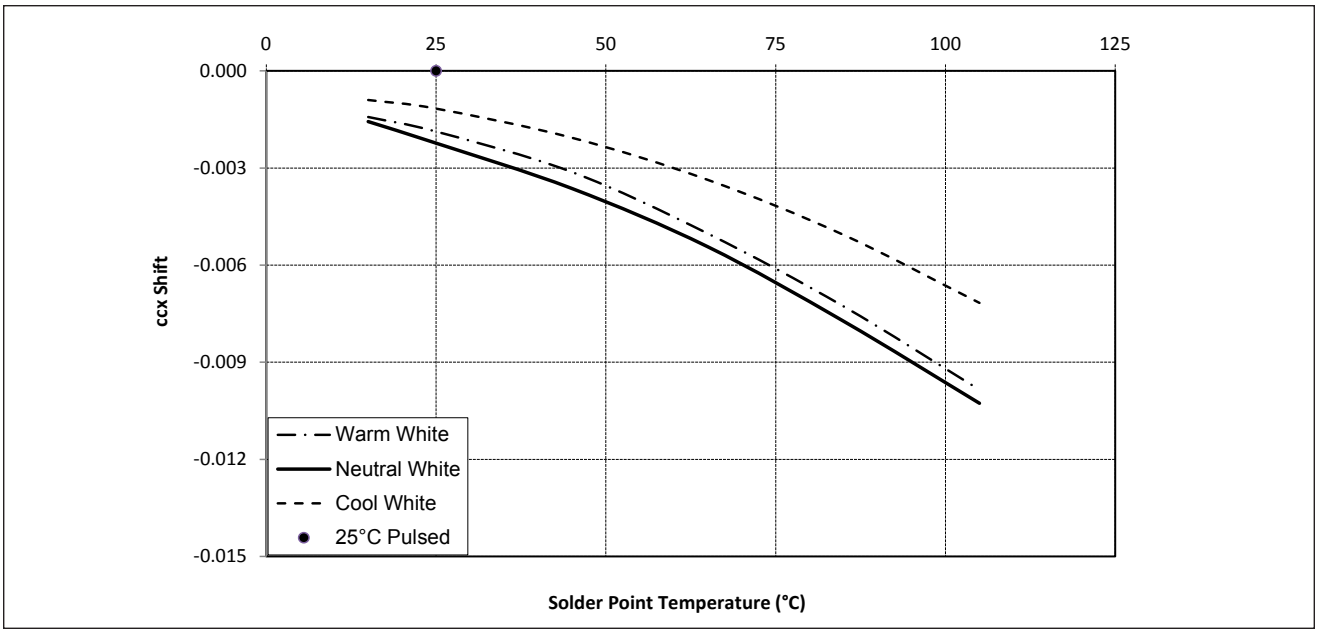

Notes for Figure 6:

1. Characteristics shown for warm white based on 3000K and 80 CRI.
2. Characteristics shown for neutral white based on 4000K and 80 CRI.
3. Characteristics shown for cool white based on 5000K and 70 CRI.
4. For other color SKUs, the shift in color will vary. Please contact your Bridgelux Sales Representative for more information.

Typical Radiation Pattern

Figure 7: **Typical Spatial Radiation Pattern at 150mA, T_{sp}=25˚C**

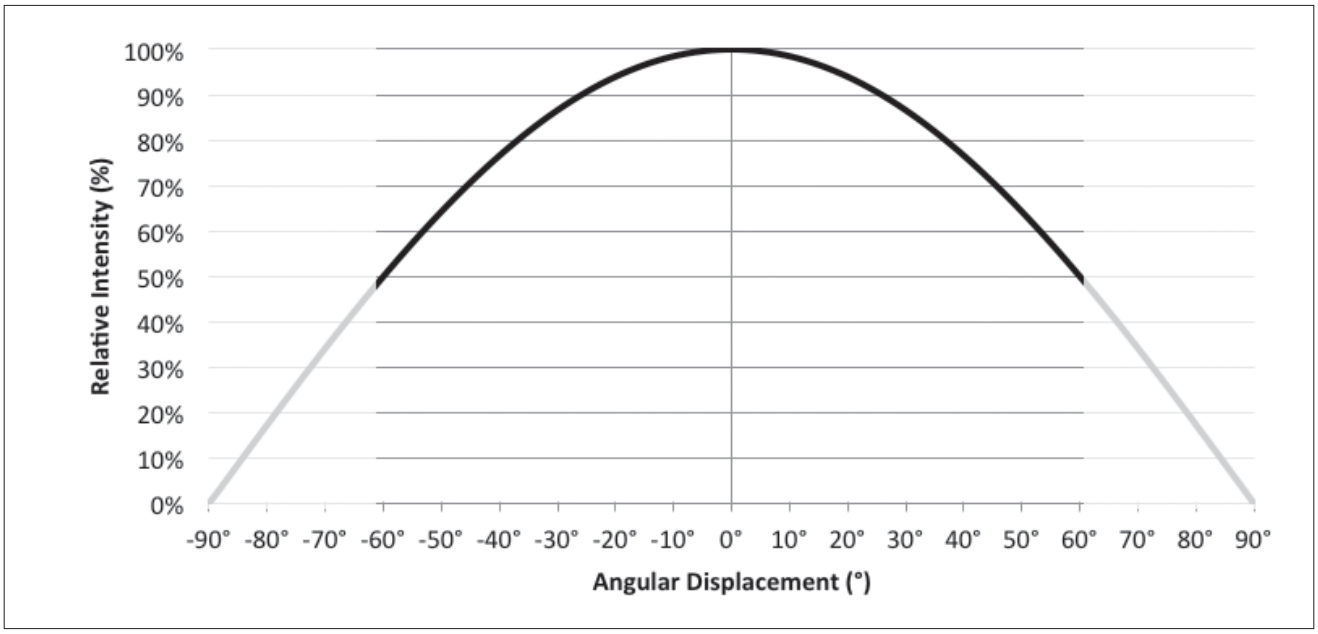

Notes for Figure 7:

1. Typical viewing angle is 120°.
2. The viewing angle is defined as the off axis angle from the centerline where Iv is ½ of the peak value.

Figure 8: **Typical Polar Radiation Pattern at 150mA, T_{sp}=25˚C**

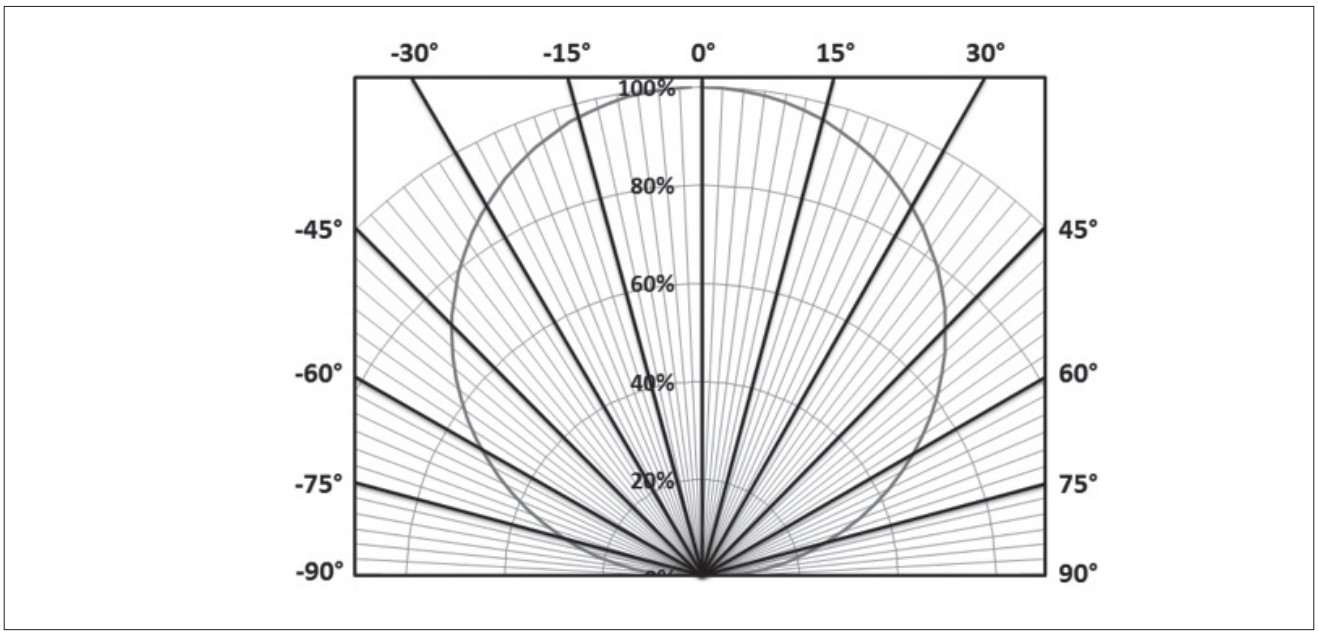

Typical Color Spectrum

Figure 9: Typical Color Spectrum

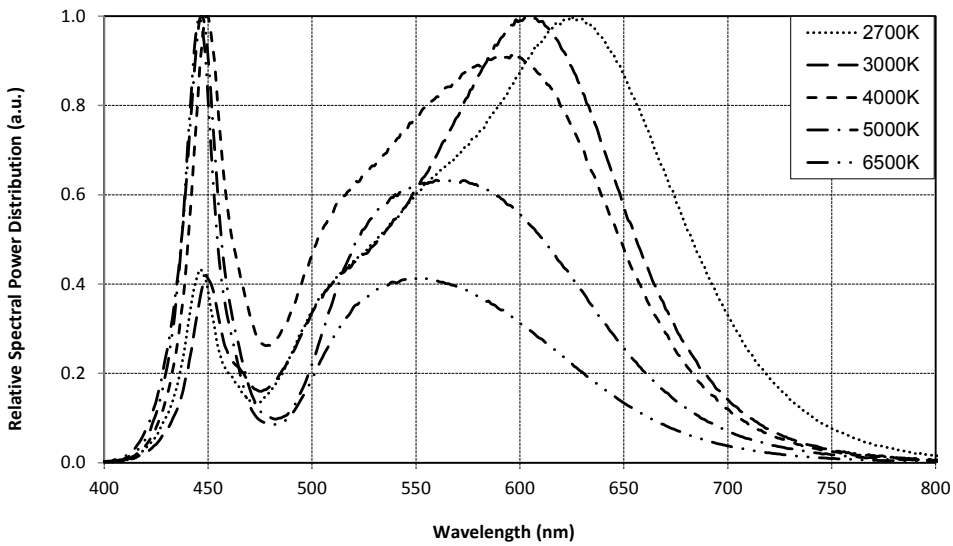

Notes for Figure 9:

1. Color spectra measured at nominal current for T_{sp} = 25˚C
2. Color spectra shown for warm white is 2700K and 90 CRI.
3. Color spectra shown for warm white is 3000K and 80 CRI.
4. Color spectra shown for neutral white is 4000K and 80 CRI.
5. Color spectra shown for cool white is 5000K and 70 CRI.
6. Color spectra shown for cool white is 6500K and 70 CRI.

Mechanical Dimensions

Figure 10: **Drawing for SMD 3030**

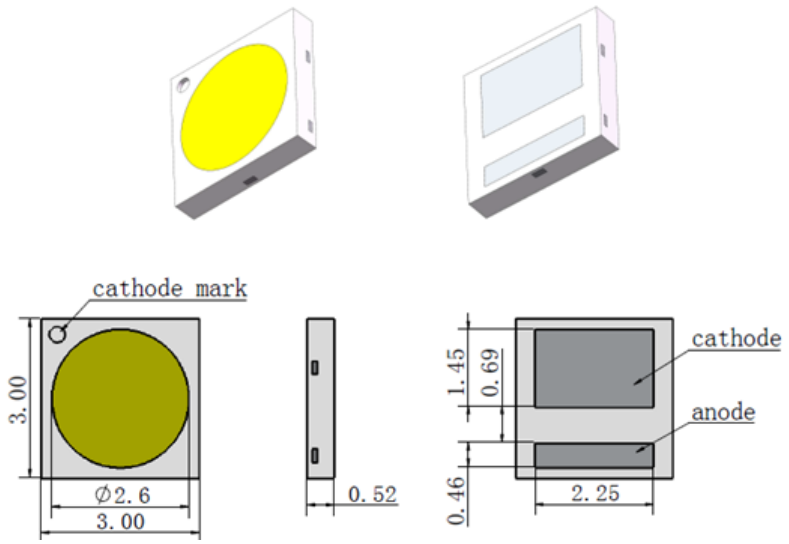

Notes for Figure 10:

1. Drawings are not to scale.
2. Drawing dimensions are in millimeters.
3. Unless otherwise specified, tolerances are ± 0.10mm.
4. The optical center of the LED emitter is nominally defined by the mechanical center of the emitter. The light emitting surface (LES) is centered on the mechanical center of the LED emitter to a tolerance of ± 0.2 mm

Recommended PCB Soldering Pad Pattern

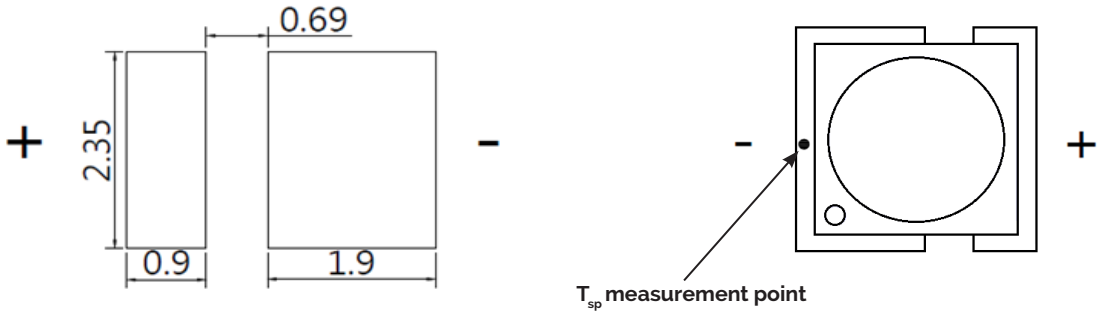

Reliability

Table 9: Reliability Test Items and Conditions

No .	Items	Reference Standard	Test Conditions	Drive Current	Test Duration	Units Failed/Tested
1	Moisture/reflow Sensitivity	J-STD-020E	T_{sld} = 260˚C, 10sec, Precondition: 85˚C, 60%RH, 168hr		3 reflows	0/22
2	Low Temperature Storage	JESD22-A119	T_a=-40˚C		1000 hours	0/22
3	High Temperature Storage	JESD22-A103D	T_a=100˚C		1000 hours	0/22
4	Low Temperature Operating Life	JESD22-A108D	T_a=-40˚C	150mA	1000 hours	0/22
5	Temperature Humidity Operating Life	JESD22-A101C	T_{sp}=85˚C, RH=85%	150mA	1000 hours	0/22
6	High Temperature Operating Life	JESD22-A108D	T_{sp}=105˚C	240mA	1000 hours	0/22
7	Thermal Shock	JESD22-A106B	T_a=-40˚C ~100˚C; Dwell : 15min; Transfer: 10sec		200 Cycle	0/22
8	Temperature Cycle	JESD22-A104E	T_a=-40˚C ~100˚C; Dwell at extreme temperature: 15min; Ramp rate < 105˚C/min		200 Cycle	0/22
9	Electrostatic Discharge	JS-001-2012	HBM, 2KV, 1.5kΩ, 100pF, Alternately positive or negative			0/22

Passing Criteria

Item	Symbol	Test Condition	Passing Criteria
Forward Voltage	Vf	150mA	ΔVf<10%
Luminous Flux	Iv	150mA	ΔIv<30%
Chromaticity Coordinates	(x, y)	150mA	Δu'v'<0.007

Notes for Table 9:

1. Measurements are performed after allowing the LEDs to return to room temperature
2. T_{sld} : reflow soldering temperature; T_a : ambient temperature

Reflowing Characteristics

Figure 11 : Reflow Profile

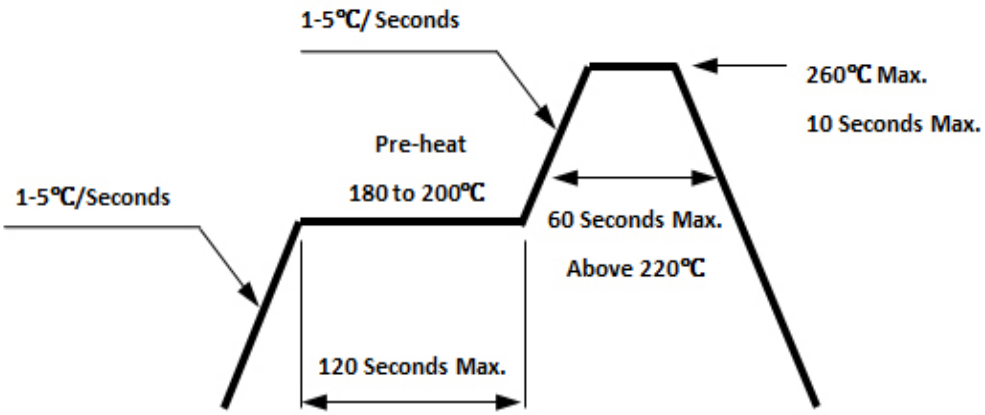

Profile Feature	Lead Free Assembly
Preheat: Temperature Range	180˚C – 200˚C
Preheat: Time (Maximum)	120 seconds
Peak Temperature	260˚C
Soldering Time (Maximum)	10 seconds
Allowable Reflow Cycles	2

Figure 12 : Pick and Place

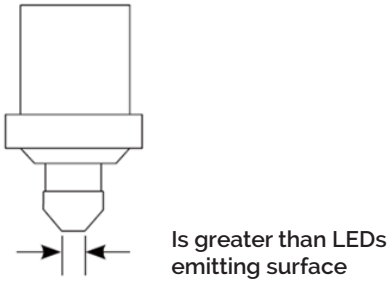

Note for Figure 12:

1. When using a pick and place machine, choose a nozzle that has a larger diameter than the LED's emitting surface. Using a Pick-and-Place nozzle with a smaller diameter than the size of the LEDs emitting surface will cause damage and may also cause the LED to not illuminate.

Packaging

Figure 13: Emitter Reel Drawings

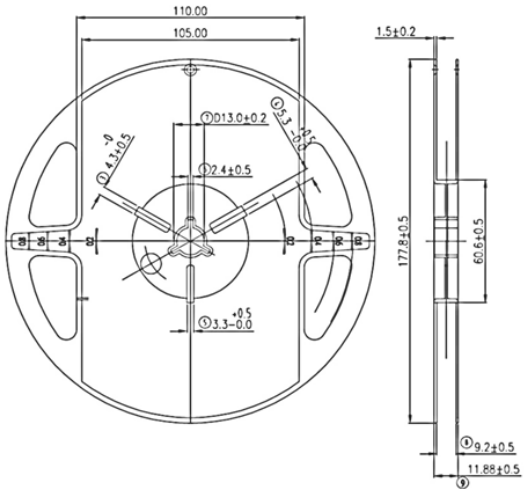

Note for Figure 13:

1. Drawings are not to scale. Drawing dimensions are in millimeters.

Figure 14: Emitter Tape Drawings

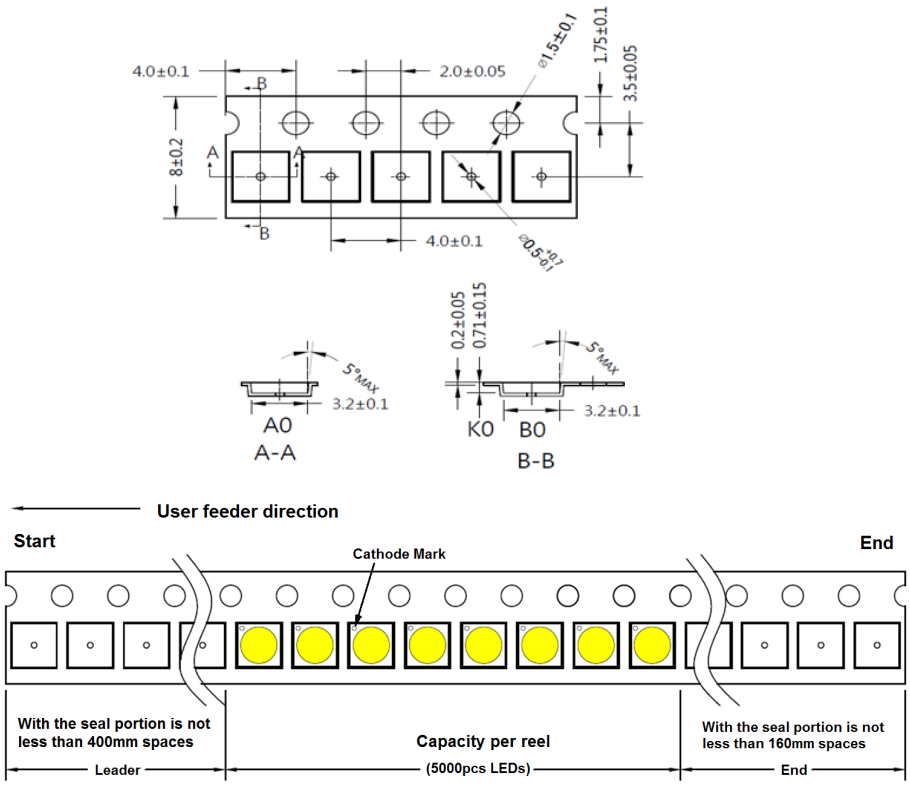

Note for Figure 14:

1. Drawings are not to scale. Drawing dimensions are in millimeters.

Packaging

Figure 15: Emitter Reel Packaging Drawings

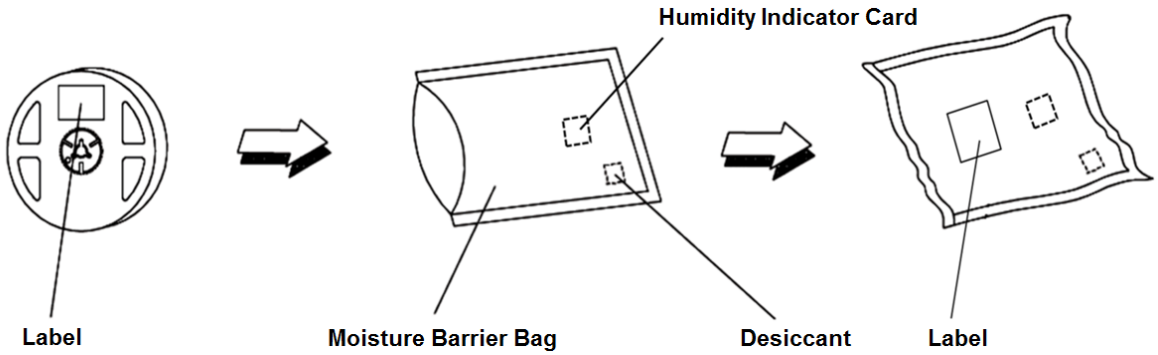

Note for Figure 15:

1. Drawings are not to scale.

Design Resources

Optical Source Models

Optical source models and ray set files are available for all Bridgelux products. For a list of available formats, visit www.bridgelux.com.

Please contact your Bridgelux sales representative for assistance.

Precautions

CAUTION: CHEMICAL EXPOSURE HAZARD

Exposure to some chemicals commonly used in luminaire manufacturing and assembly can cause damage to the LED emitter. Please consult Bridgelux Application Note AN51 for additional information.

CAUTION: EYE SAFETY

Eye safety classification for the use of Bridgelux SMD LED emitter is in accordance with IEC specification EN62471: Photobiological Safety of Lamps and Lamp Systems. SMD LED emitters are classified as Risk Group Exempt when operated at or below the maximum drive current. Please use appropriate precautions. It is important that employees working with LEDs are trained to use them safely.

CAUTION: RISK OF BURN

Do not touch the SMD LED emitter during operation. Allow the array to cool for a sufficient period of time before handling. The SMD LED emitter may reach elevated temperatures such that could burn skin when touched.

CAUTION

CONTACT WITH LIGHT EMITTING SURFACE (LES)

Avoid any contact with the LES. Do not touch the LES of the emitter or apply stress to the LES (yellow phosphor resin area). Contact may cause damage to the emitter

Optics and reflectors must not be mounted in contact with the LES (yellow phosphor resin area).

Disclaimers

MINOR PRODUCT CHANGE POLICY

The rigorous qualification testing on products offered by Bridgelux provides performance assurance. Slight cosmetic changes that do not affect form, fit, or function may occur as Bridgelux continues product optimization.

STANDARD TEST CONDITIONS

Unless otherwise stated, LED emitter testing is performed at the nominal drive current.

About Bridgelux: We Build Light That Transforms

At Bridgelux, we help companies, industries and people experience the power and possibility of light. Since 2002, we've designed LED solutions that are high performing, energy efficient, cost effective and easy to integrate. Our focus is on light's impact on human behavior, delivering products that create better environments, experiences and returns—both experiential and financial. And our patented technology drives new platforms for commercial and industrial luminaires.

For more information about the company, please visit
bridgelux.com
twitter.com/Bridgelux
facebook.com/Bridgelux
WeChat ID: BridgeluxInChina

101 Portola Avenue
Livermore, CA 94551
Tel (925) 583-8400
Fax (925) 583-8410
www.bridgelux.com

© 2016 Bridgelux, Inc. All rights reserved 2016. Product specifications are subject to change without notice. Bridgelux and the Bridgelux stylized logo design are registered trademarks of Bridgelux, Inc. All other trademarks are the property of their respective owners.

Bridgelux SMD 3030 Product Data Sheet DS51 Rev. F (05/2016)